0 603 272 162
Stand } ~~99-04~~
Issue } 01-03-05

Fig./Abb. 1

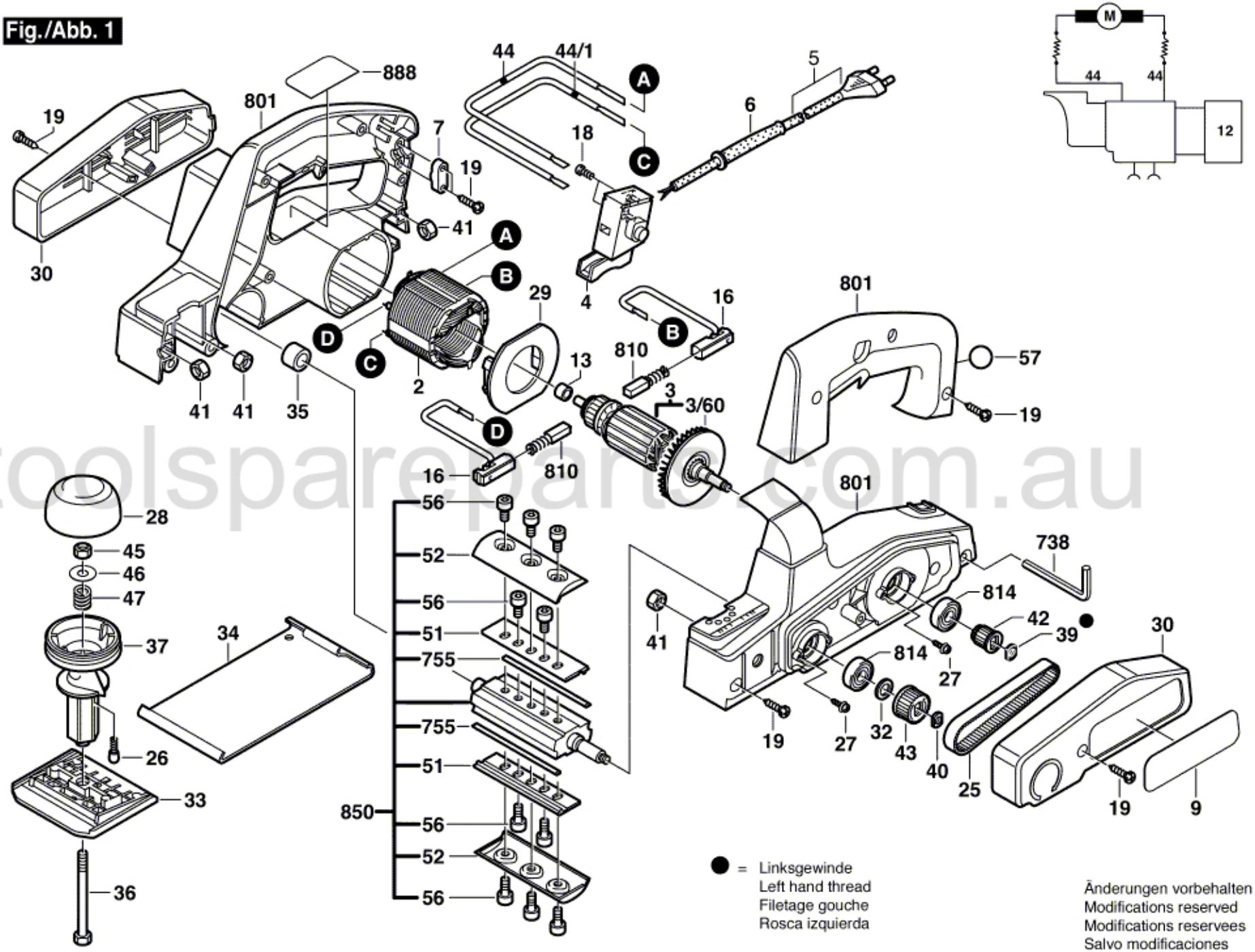

toolspareparts.com.au